MotorAgents.com - Click here for Pricing/Ordering

BALDOR • RELIANCE

Product Information Packet

AOM3617T

1HP,860RPM,3PH,60HZ,182T,3623M,TEAO,F1,N

Copyright © All product information within this document is subject to Baldor Electric Company copyright © protection, unless otherwise noted.

Product Detail

Revision:	A	**Status:**	PRD/A	**Change #:**		**Proprietary:**	No
Type:	AC	**Prod Type:**	3623M	**Elec. Spec:**	36WGT755	**CD Diagram:**	CD0005
Enclosure	TEAO	**Mfg Plant:**		**Mech Spec:**	36G256	**Layout:**	36LYG256
Frame:	182T	**Mounting:**	F1	**Poles:**	08	**Created Date:**	01-24-2007
Base:	RG	**Rotation:**	R	**Insulation:**	B	**Eff. Date:**	05-02-2007
Leads:	9#16 36" LONG	**Literature:**	Y	**Elec. Diagram:**		**Replaced By:**	

Nameplate NP1256L

CAT.NO.	AOM3617T						
SPEC.	36G256T755G1						
HP	1						
VOLTS	208-230/460						
AMP	4.9-4.4/2.2						
RPM	860						
FRAME	182T	**HZ**	60	**PH**	3		
SER.F.	1.00	**CODE**	J	**DES**	B	**CLASS**	B
NEMA-NOM-EFF	74	**PF**	56				
RATING	40C AMB-CONT						
CC		**USABLE AT 208V**					
DE	6206	**ODE**	6205				
ENCL	TEAO	**SN**					
	825 FPM AT 100 CFM						

Parts List

Product ID	Description	Quantity	List Price
SA152817	SA 36G256T755G1	1.000	561.00
RA141578	RA 36G256T755G1	1.000	468.00
36CB3004	36 CB CASTING W/1.09 DIA LEAD HOLE @ 6:0	1.000	19.00
36GS1000SP	GASKET-CONDUIT BOX, .06 THICK #SV-330 LE	1.000	5.00
51XB1016A08	10-16X 1/2HXWSSLD SERTYB	2.000	2.00
11XW1032G06	10-32 X .38, TAPTITE II, HEX WSHR SLTD U	1.000	3.00
HW3001A01	D3019 BRASS WASHER(STIMP)	1.000	2.00
36EP3101A02	FR ENDPLATE, MACH -TENV- W/GREASER, 205	1.000	86.00
HW4500A01	1641B(ALEMITE)400 UNIV, GREASE FITT	1.000	2.00
HW5100A05	WVY WSHR F/205 & 304 BRGS	1.000	2.00
36EP3100A15	ENDPLATE, MACH	1.000	98.00
HW4500A01	1641B(ALEMITE)400 UNIV, GREASE FITT	1.000	2.00
10XN2520A20	1/4-20X 1 1/4 HEX HD X	2.000	2.00
HW1001A25	LOCKWASHER 1/4, ZINC PLT .493 OD, .255 I	2.000	2.00
XY2520A12	1/4-20 HEX NUT, DIRECTIONAL SERRATIONS	4.000	1.00
36CB4516	36 LIPPED CB LID	1.000	2.00
37GS1001SP	GASKET, CONDUIT BOX LID, .06 THICK LEXID	1.000	3.00
51XW0832A07	8-32 X .44, TAPTITE II, HEX WSHR SLTD SE	4.000	2.00
HW2501E16	KEY, 1/4 SQ X 1.750	1.000	2.00
HA7000A02	KEY RETAINER RING, 1 1/8 DIA, 1 3/8 DIA	1.000	2.00
10XF0440S02	04-40 X 1/8 TYPE F HEX HD STAINLESS STIC	2.000	2.00
MJ1000A02	GREASE, POLYREX EM EXXON	0.050	10.00
MG1000G27	PAINT- S9282E CHARCOAL GREY	0.022	4,000.00
HA3101A23	THRUBOLT 1/4-20 X 9.625 DEMBY	4.000	2.00

Parts List (continued)

Product ID	Description	Quantity	List Price
LB1125C01	STD (STOCK) CARTON LABEL BALDOR WITH FLA	1.000	2.00
LC0005E01	CONN.DIA./WARNING LABEL (LC0005/LB1119)	1.000	2.00
NP1256L	NP STD LASER ENGRAVED, UL CSA CC, W/O TH	1.000	3.00
36PA1000	PACK GROUP W/LB5001	1.000	17.00

36LYG256

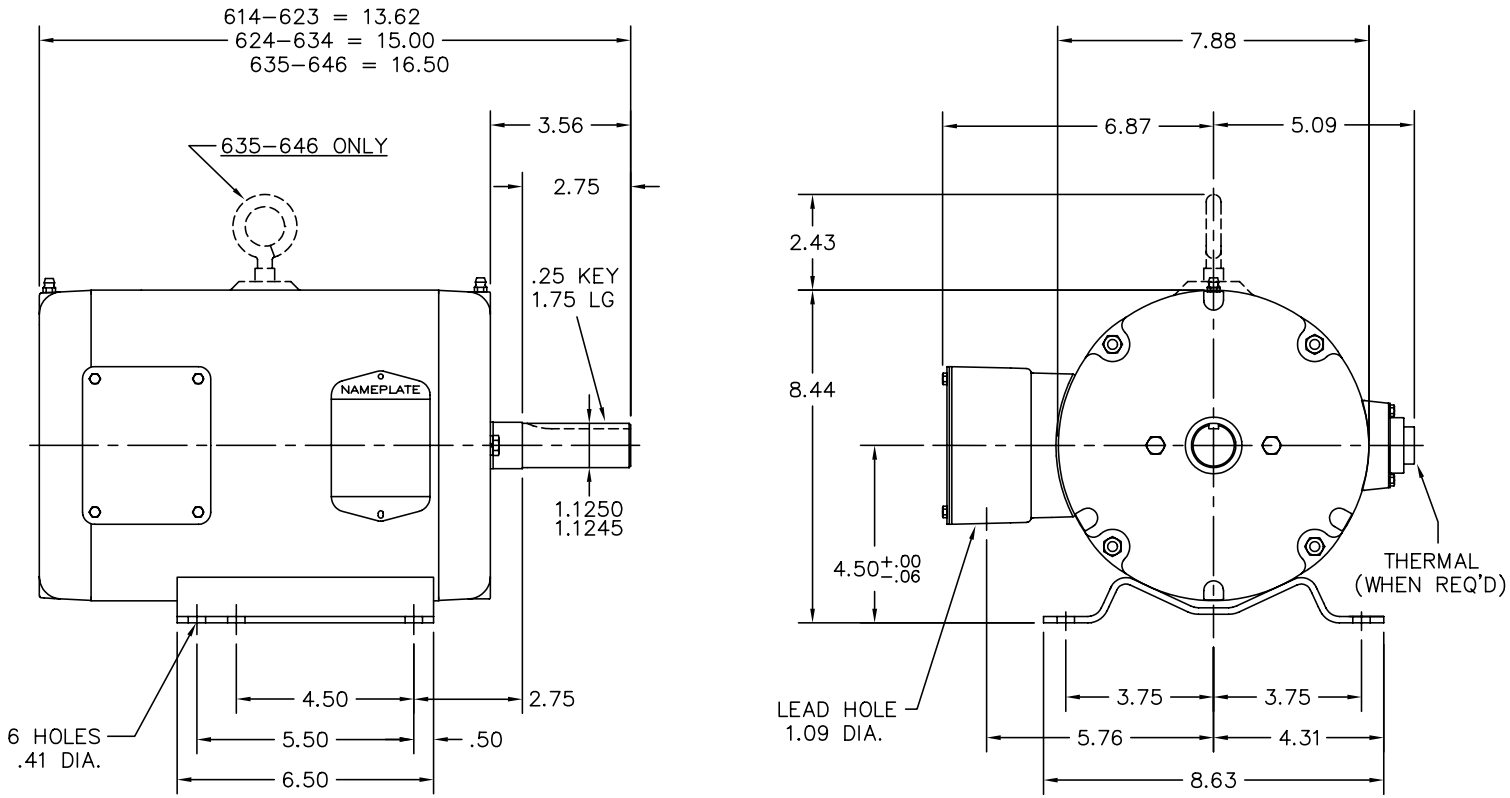

CUST. NAME		CUST. P.O.		CERTIFIED BY	MODEL		INSUL	AMB
H.P.	MTG	TYPE	R.P.M.	VOLTS	ENCL	PHASE	FREQ	FRAME
REV. DESC: CHG'D CONDUIT BOX AND LID (SEE EC09)					BALDOR ELECTRIC Co.			
REV. LTR: G	BY: JED	REVISED: 02/17/99 8:48		TDR: 0171568				
36LYG256		FILE: AAA00003794		MDL: –	SPL HORZ 182–4T TEAO 36M – W/LK'D BRG			
		MTL: –						

36LYG256

CD0005

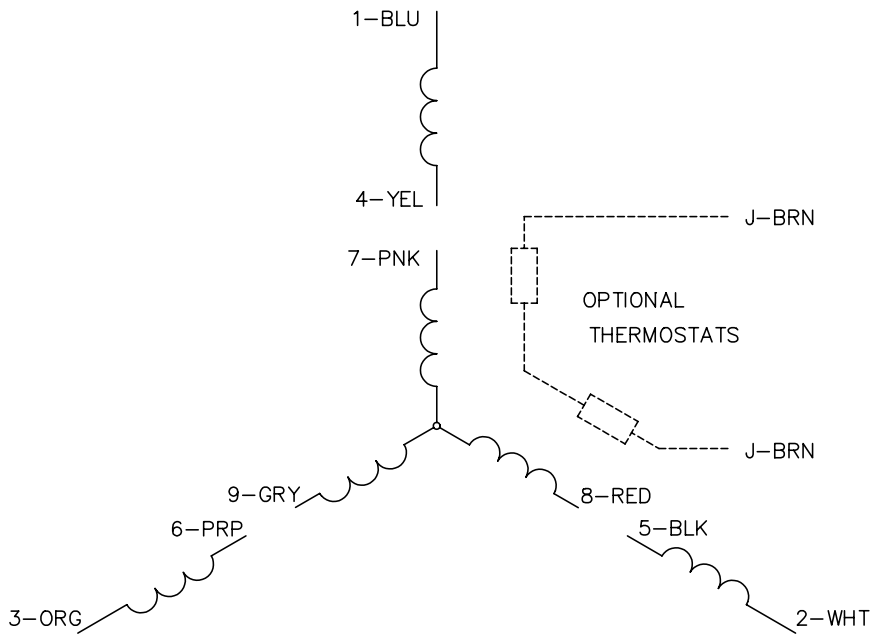

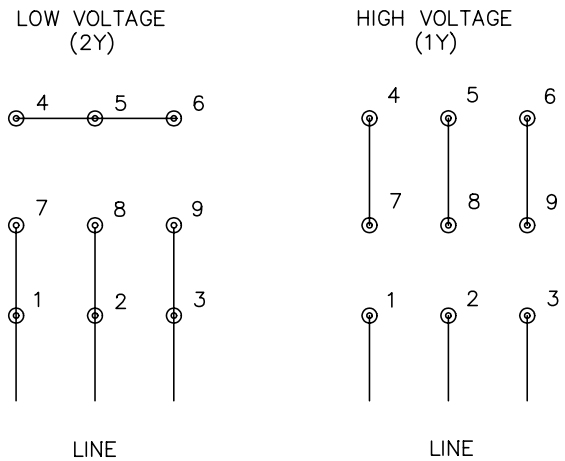

NOTES:

1. INTERCHANGE ANY TWO LINE LEADS TO REVERSE ROTATION.
2. OPTIONAL THERMOSTATS ARE PROVIDED WHEN SPECIFIED.
3. ACTUAL NUMBER OF INTERNAL PARALLEL CIRCUITS MAY BE A MULTIPLE OF THOSE SHOWN ABOVE.
4. LEAD COLORS ARE OPTIONAL. LEADS MUST ALWAYS BE NUMBERED AS SHOWN.

REV. DESC: REVISE TO SHOW OPTIONAL COLORS			
REV. LTR: E	BY: JLP	REVISED: 01/19/99 10:15	TDR: 0171435
CD0005		FILE: AAA00005140	MDL: –
		MTL: –	

BALDOR ELECTRIC Co.

3PH, DV, 9 LEADS

CD0005