MotorAgents.com - Click here for Pricing/Ordering

BALDOR • RELIANCE

Product Information Packet

EHM9232T

10HP,1760RPM,3PH,60HZ,215T,3733M,OPSB,F1

Copyright © All product information within this document is subject to Baldor Electric Company copyright © protection, unless otherwise noted.

Product Detail

Revision:	C	**Status:**	PRD/A	**Change #:**		**Proprietary:**	No
Type:	AC	**Prod Type:**	3733M	**Elec. Spec:**	37WGS076	**CD Diagram:**	CD0005
Enclosure	OPSB	**Mfg Plant:**		**Mech Spec:**	37H297	**Layout:**	37LYH297
Frame:	215T	**Mounting:**	F1	**Poles:**	04	**Created Date:**	03-28-2006
Base:	RG	**Rotation:**	R	**Insulation:**	F	**Eff. Date:**	11-15-2007
Leads:	9#14	**Literature:**		**Elec. Diagram:**		**Replaced By:**	

Nameplate NP1891A01

CAT.NO.	EHM9232T						
SPEC.	37H297S076G1						
HP	10						
VOLTS	208-230/460						
AMPS	28-26.8/13.4						
RPM	1760						
FRAME	215T	**HZ**	60	**PH**	3		
SER.F.	1.15	**CODE**	H	**DES**	B	**CL**	F
NEMA-NOM-EFF	90.2	**PF**	78				
RATING	40C AMB-CONT						
CC	010A	**USABLE AT 208V**					
DE	6307	**ODE**	6206				
AUTO	N	**MANUAL**	N	**NONE**	Y		
ENCL	OPSB	**SN**					
BLANK							

Parts List

Product ID	Description	Quantity	List Price
SA140972	SA 37H297S076G1	1.000	698.00
RA130334	RA 37H297S076G1	1.000	582.00
HA6361A01	LIFTING LUG FOR 37, 39 & 40 FRAME (AUTOP	2.000	2.00
37CB3004	37 CB CASTING W/1.09 LEAD HOLE @ 6:00	1.000	20.00
51XW2520A10	.25-20 X .62, TAPTITE II, HEX WSHR SLTD	4.000	2.00
11XW1032G06	10-32 X .38, TAPTITE II, HEX WSHR SLTD U	1.000	3.00
HW3001A01	D3019 BRASS WASHER(STIMP)	1.000	2.00
37EP3200A02	FR ENDPLATE 37 L & M OPEN	1.000	114.00
HW5100A06	W2420-025 WVY WSHR (WB)	1.000	2.00
37EP3201A02	PUEP OPEN 206 BRG W/O GREASER	1.000	114.00
XY3118A12	5/16-18 HEX NUT DIRECTIONAL SERRATION	4.000	2.00
37CB4516	CONDUIT BOX LID FOR OPEN AND GP 37 FRAME	1.000	2.00
51XW0832A07	8-32 X .44, TAPTITE II, HEX WSHR SLTD SE	4.000	2.00
HW2501F21	KEY, 5/16 SQ X 2.375	1.000	4.00
HA7000A02	KEY RETAINER RING, 1 1/8 DIA, 1 3/8 DIA	1.000	2.00
MJ1000A02	GREASE, POLYREX EM EXXON	0.050	10.00
MG1000G55	682.62 LACQUER LIGHT GRAY LHAPS	0.028	61.00
HA3104A39	THRUBOLT-5/16-18 X 12.250	4.000	4.00
37AD2001A01	BAFFLE PLATE, STAMPED	2.000	39.00
LB1125C01	STD (STOCK) CARTON LABEL BALDOR WITH FLA	1.000	2.00
NP1891A01	PREM EFF HVAC MTR, W/CD0005 CONNS	1.000	
36PA1001	PACKAGING GROUP	1.000	25.00

Performance Data at 460V, 60Hz, 10.0HP (Typical performance - Not guaranteed values)

General Characteristics			
Full Load Torque:	29.7 LB-FT	**Start Configuration:**	DOL
No-Load Current:	6.73 Amps	**Break-Down Torque:**	96.5 LB-FT
Line-line Res. @ 25°C.:	1.29 Ohms A Ph / 0.0 Ohms B Ph	**Pull-Up Torque:**	38.1 LB-FT
Temp. Rise @ Rated Load:	41ºC	**Locked-Rotor Torque:**	54.2 LB-FT
Temp. Rise @ S.F. Load:	50ºC	**Starting Current:**	84.3 Amps

Load Characteristics

% of Rated Load:	**25**	**50**	**75**	**100**	**125**	**150**	**S.F.**
Power Factor:	36.0	59.0	70.0	77.0	80.0	81.0	79.0
Efficiency:	87.1	90.8	90.8	90.5	89.2	87.2	89.7
Speed:	1791.0	1782.0	1772.0	1762.0	1750.0	1736.0	1755.0
Line Amperes:	7.27	8.79	10.9	13.4	16.3	19.7	15.1

Performance Graph at 460V, 60Hz, 10.0HP (Typical performance - Not guaranteed values)

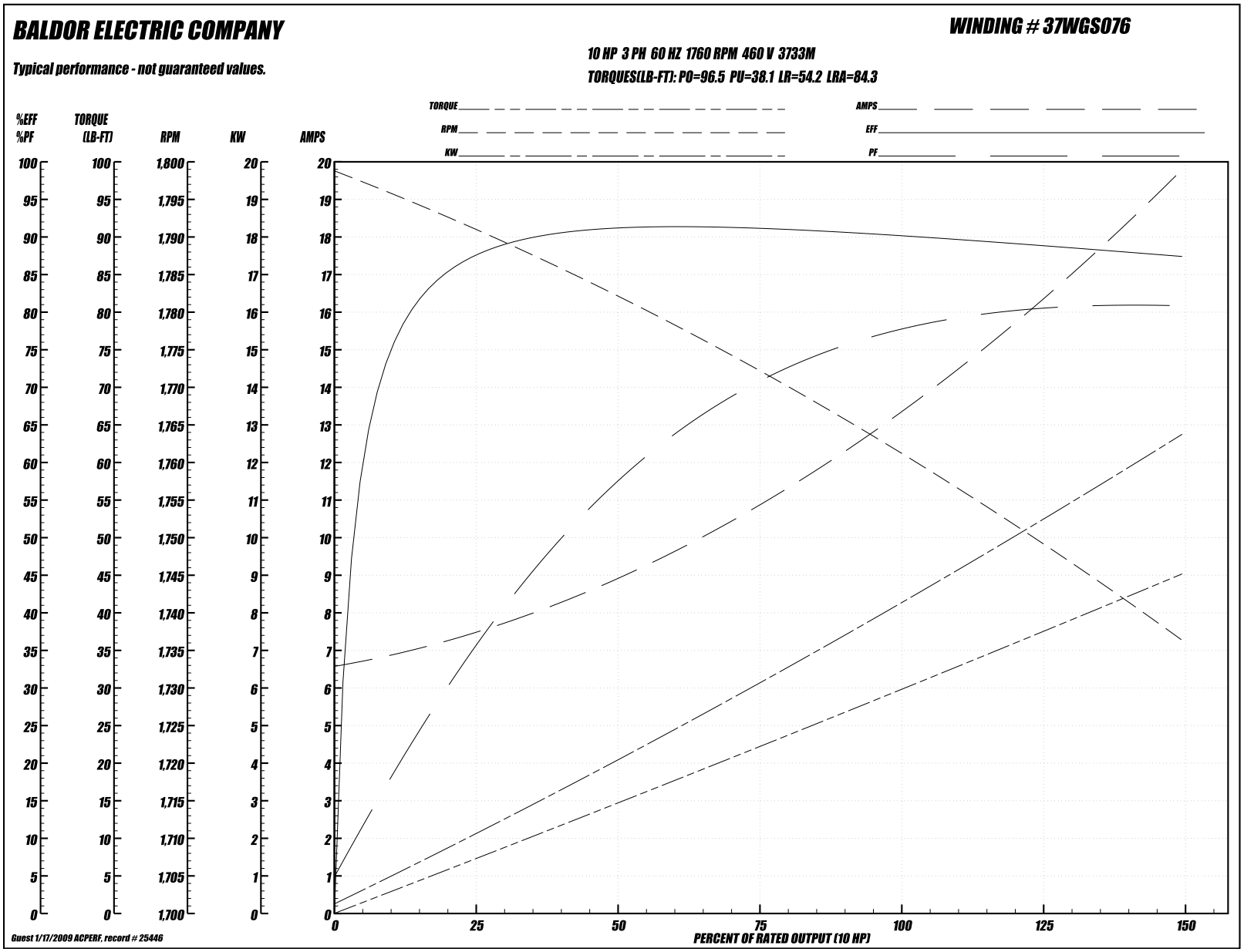

37LYH297

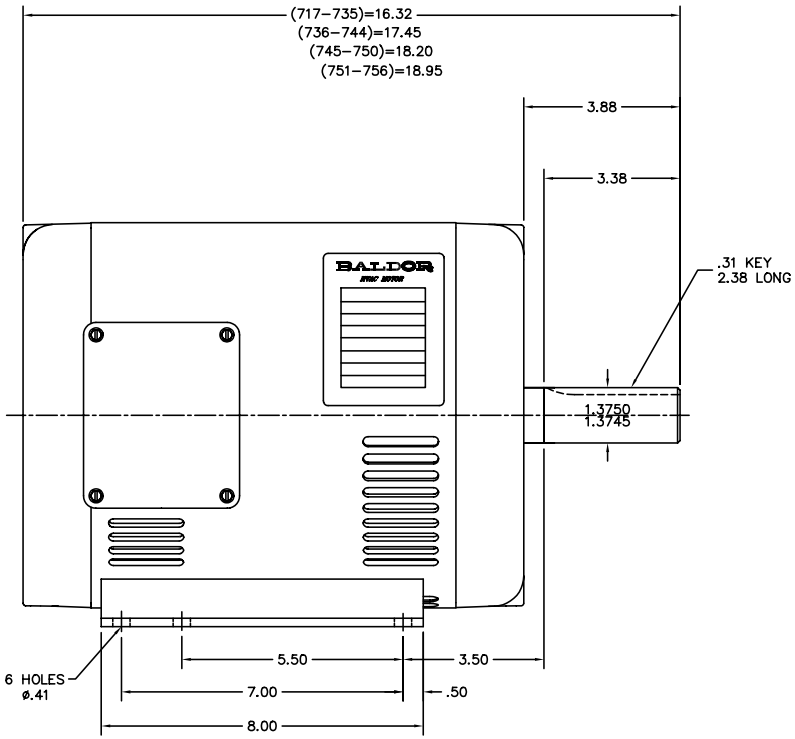

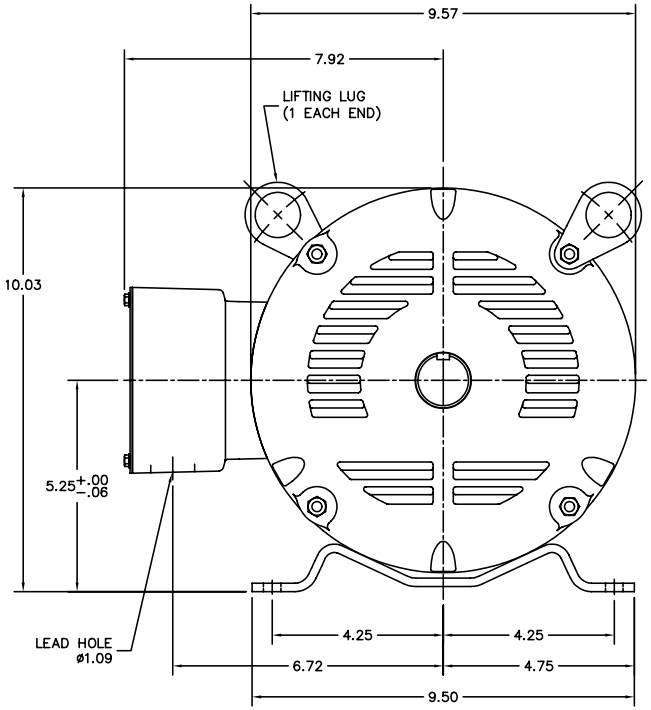

CUST. NAME	CUST. P.O.	CERTIFIED BY	MODEL	INSUL	AMB			
H.P.	MTG	TYPE	R.P.M.	VOLTS	ENCL	PHASE	FREQ	FRAME
REV. DESC: ADDED LEAD HOLE NOTE				BALDOR ELECTRIC Co.				
REV. LTR: B	BY: JED	REVISED: 05/10/00 7:49	TDR: 0209523					
FILE: AAA00070277			MDL: –	STD HORZ 213–5T OPSB 37M (HVAC)				
MTL: –								

37LYH297

CD0005

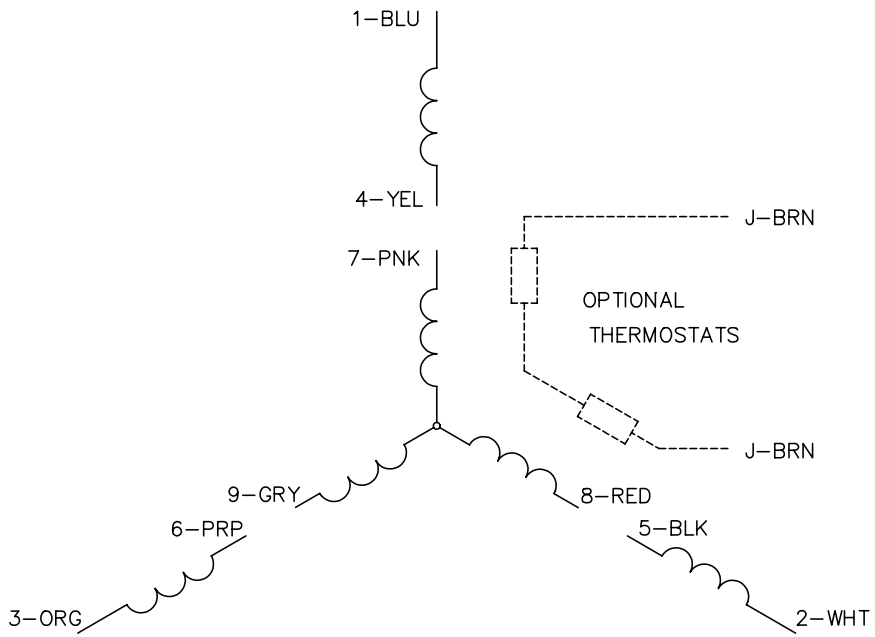

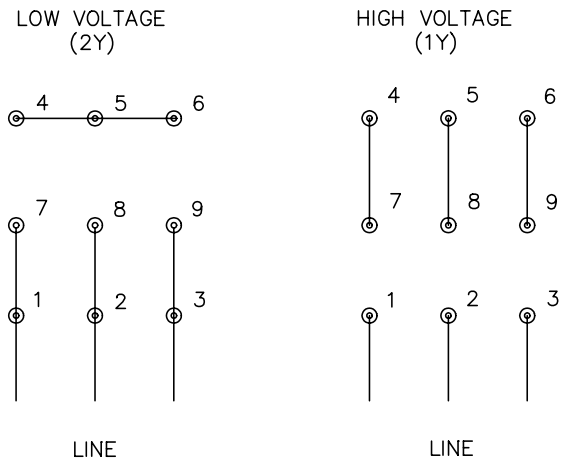

NOTES:

1. INTERCHANGE ANY TWO LINE LEADS TO REVERSE ROTATION.
2. OPTIONAL THERMOSTATS ARE PROVIDED WHEN SPECIFIED.
3. ACTUAL NUMBER OF INTERNAL PARALLEL CIRCUITS MAY BE A MULTIPLE OF THOSE SHOWN ABOVE.
4. LEAD COLORS ARE OPTIONAL. LEADS MUST ALWAYS BE NUMBERED AS SHOWN.

REV. DESC: REVISE TO SHOW OPTIONAL COLORS			
REV. LTR: E	BY: JLP	REVISED: 01/19/99 10:15	TDR: 0171435
CD0005		FILE: AAA00005140	MDL: –
		MTL: –	

BALDOR ELECTRIC Co.

3PH, DV, 9 LEADS

CD0005